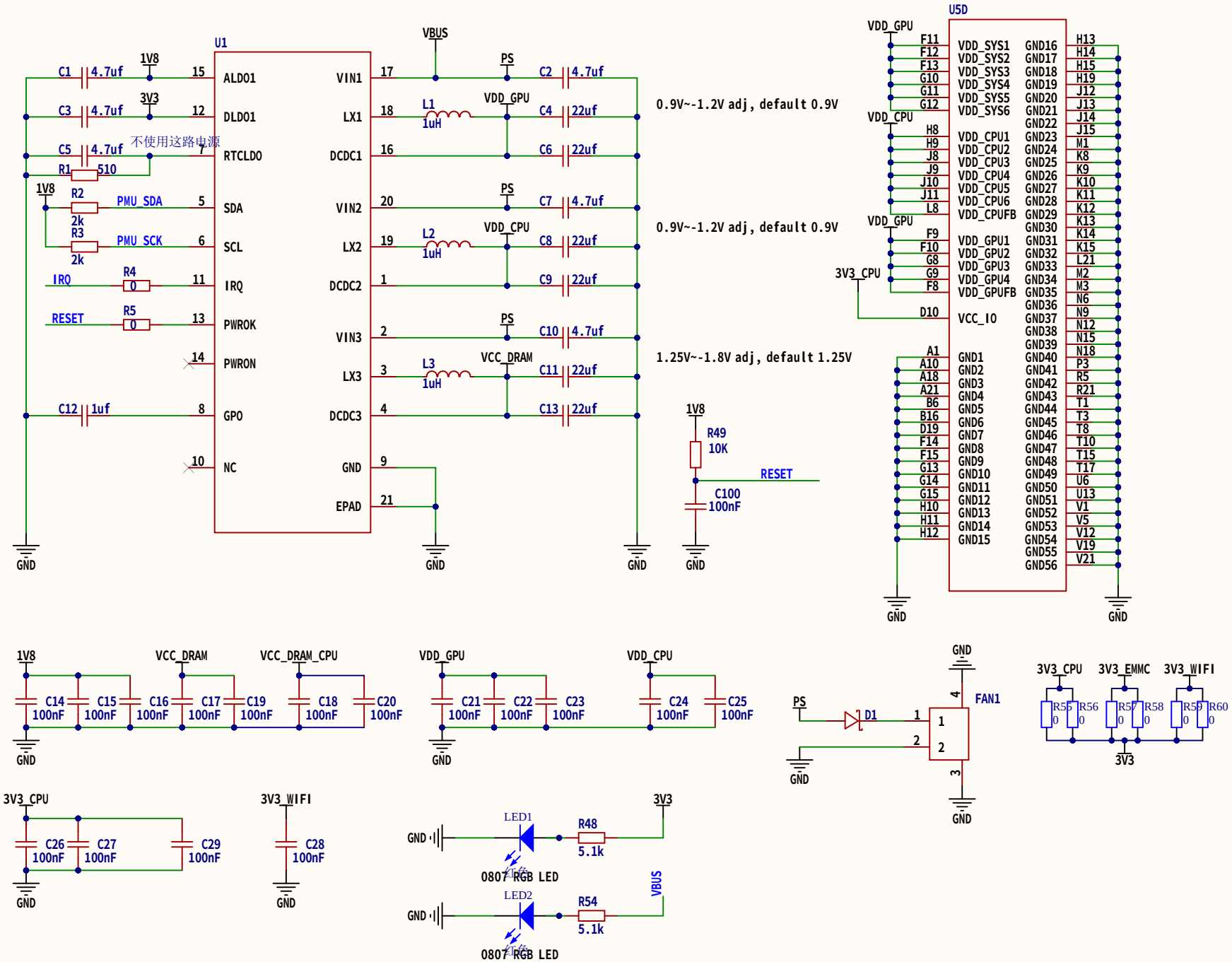
U1
ALDO1
DLDO1
RTCLDO
SDA
SCL
IRQ
PWROK
PWRON
GPO
NC
VIN1
LX1
DCDC1
VIN2
LX2
DCDC2
VIN3
LX3
DCDC3
GND
EPAD
VBUS
PS
VDD_GPU
VDD_CPU
VCC_DRAM
0.9V~-1.2V adj, default 0.9V
0.9V~-1.2V adj, default 0.9V
1.25V~-1.8V adj, default 1.25V
不使用这路电源
PMU_SDA
PMU_SCK
RESET
U5D
VDD_SYS1
VDD_SYS2
VDD_SYS3
VDD_SYS4
VDD_SYS5
VDD_SYS6
VDD_CPU1
VDD_CPU2
VDD_CPU3
VDD_CPU4
VDD_CPU5
VDD_CPU6
VDD_CPUFB
VDD_GPU1
VDD_GPU2
VDD_GPU3
VDD_GPU4
VDD_GPUFB
VCC_IO
3V3_CPU
VCC_DRAM_CPU
3V3_EMMC
3V3_WIFI
FAN1
D1
LED1
LED2
0807 RGB LED

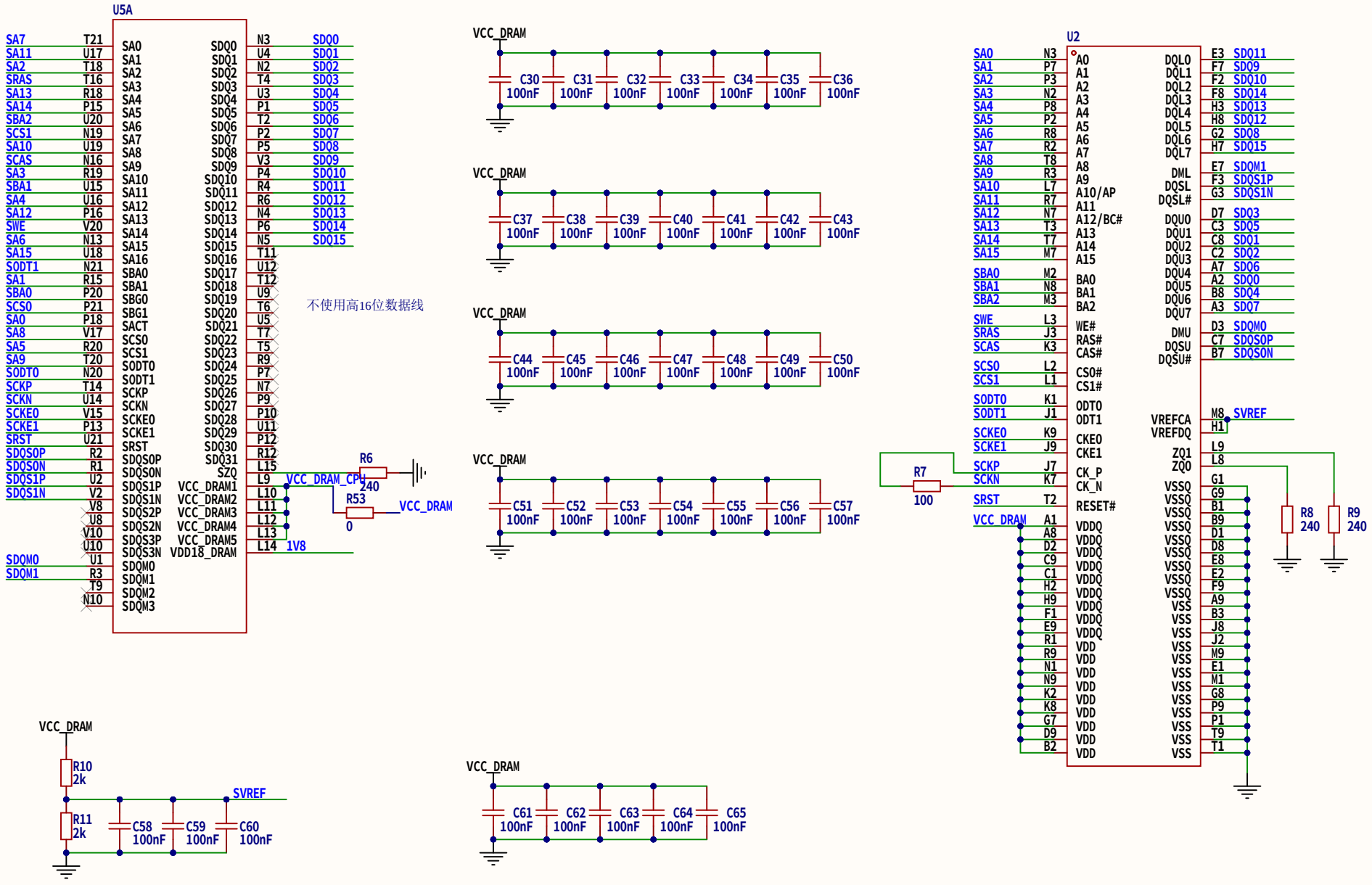
U5A
SA7 T21
SA11 U17
SA2 T18
SRAS T16
SA13 R18
SA14 P15
SBA2 U20
SCS1 N19
SA10 U19
SCAS N16
SA3 R19
SBA1 U15
SA4 U16
SA12 P16
SWE V20
SA6 N13
SA15 U18
SODT1 N21
SA1 R15
SBA0 P20
SCS0 P21
SA0 P18
SA8 V17
SA5 R20
SA9 T20
SODT0 N20
SCKP T14
SCKN U14
SCKE0 V15
SCKE1 P13
SRST U21
SDQS0P R2
SDQS0N R1
SDQS1P U2
SDQS1N V2
V8
U8
V10
U10
SDQM0 U1
SDQM1 R3
T9
N10
SA0
SA1
SA2
SA3
SA4
SA5
SA6
SA7
SA8
SA9
SA10
SA11
SA12
SA13
SA14
SA15
SA16
SBA0
SBA1
SBG0
SBG1
SACT
SCS0
SCS1
SODT0
SODT1
SCKP
SCKN
SCKE0
SCKE1
SRST
SDQS0P
SDQS0N
SDQS1P
SDQS1N
SDQS2P
SDQS2N
SDQS3P
SDQS3N
SDQM0
SDQM1
SDQM2
SDQM3
SDQ0
SDQ1
SDQ2
SDQ3
SDQ4
SDQ5
SDQ6
SDQ7
SDQ8
SDQ9
SDQ10
SDQ11
SDQ12
SDQ13
SDQ14
SDQ15
SZQ
VCC_DRAM1
VCC_DRAM2
VCC_DRAM3
VCC_DRAM4
VCC_DRAM5
VDD18_DRAM
N3 SDQ0
U4 SDQ1
N2 SDQ2
T4 SDQ3
U3 SDQ4
P1 SDQ5
T2 SDQ6
P2 SDQ7
P5 SDQ8
V3 SDQ9
P4 SDQ10
R4 SDQ11
R6 SDQ12
N4 SDQ13
P6 SDQ14
N5 SDQ15
T11
U12
T12
U9
T6
U5
T7
T5
R9
P7
N7
P9
P10
U11
P12
R12
L15
L9 VCC_DRAM_CPU
L10
L11
L12
L13
L14 1V8
不使用高16位数据线
R6
240
R53
0
VCC_DRAM
VCC_DRAM
C30 100nF
C31 100nF
C32 100nF
C33 100nF
C34 100nF
C35 100nF
C36 100nF
VCC_DRAM
C37 100nF
C38 100nF
C39 100nF
C40 100nF
C41 100nF
C42 100nF
C43 100nF
VCC_DRAM
C44 100nF
C45 100nF
C46 100nF
C47 100nF
C48 100nF
C49 100nF
C50 100nF
VCC_DRAM
C51 100nF
C52 100nF
C53 100nF
C54 100nF
C55 100nF
C56 100nF
C57 100nF
U2
SA0 N3
SA1 P7
SA2 P3
SA3 N2
SA4 P8
SA5 P2
SA6 R8
SA7 R2
SA8 T8
SA9 R3
SA10 L7
SA11 R7
SA12 N7
SA13 T3
SA14 T7
SA15 M7
SBA0 M2
SBA1 N8
SBA2 M3
SWE L3
SRAS J3
SCAS K3
SCS0 L2
SCS1 L1
SODT0 K1
SODT1 J1
SCKE0 K9
SCKE1 J9
SCKP J7
SCKN K7
SRST T2
VCC_DRAM A1
A8
D2
C9
C1
H2
H9
F1
E9
R1
R9
N1
N9
K2
K8
G7
D9
B2
A0
A1
A2
A3
A4
A5
A6
A7
A8
A9
A10/AP
A11
A12/BC#
A13
A14
A15
BA0
BA1
BA2
WE#
RAS#
CAS#
CS0#
CS1#
ODT0
ODT1
CKE0
CKE1
CK_P
CK_N
RESET#
VDDQ
VDD
DQL0
DQL1
DQL2
DQL3
DQL4
DQL5
DQL6
DQL7
DML
DQSL
DQSL#
DQU0
DQU1
DQU2
DQU3
DQU4
DQU5
DQU6
DQU7
DMU
DQSU
DQSU#
VREFCA
VREFDQ
ZQ1
ZQ0
VSSQ
VSS
E3 SDQ11
F7 SDQ9
F2 SDQ10
F8 SDQ14
H3 SDQ13
H8 SDQ12
G2 SDQ8
H7 SDQ15
E7 SDQM1
F3 SDQS1P
G3 SDQS1N
D7 SDQ3
C3 SDQ5
C8 SDQ1
C2 SDQ2
A7 SDQ6
A2 SDQ0
B8 SDQ4
A3 SDQ7
D3 SDQM0
C7 SDQS0P
B7 SDQS0N
M8 SVREF
H1
L9
L8
G1
G9
B1
B9
D1
D8
E8
E2
F9
A9
B3
J8
J2
M9
E1
M1
G8
P9
P1
T9
T1
R7
100
R8
240
R9
240
VCC_DRAM
R10
2k
R11
2k
SVREF
C58 100nF
C59 100nF
C60 100nF
VCC_DRAM
C61 100nF
C62 100nF
C63 100nF
C64 100nF
C65 100nF

1101 BOOT SEL: SDCARD -> EMMC

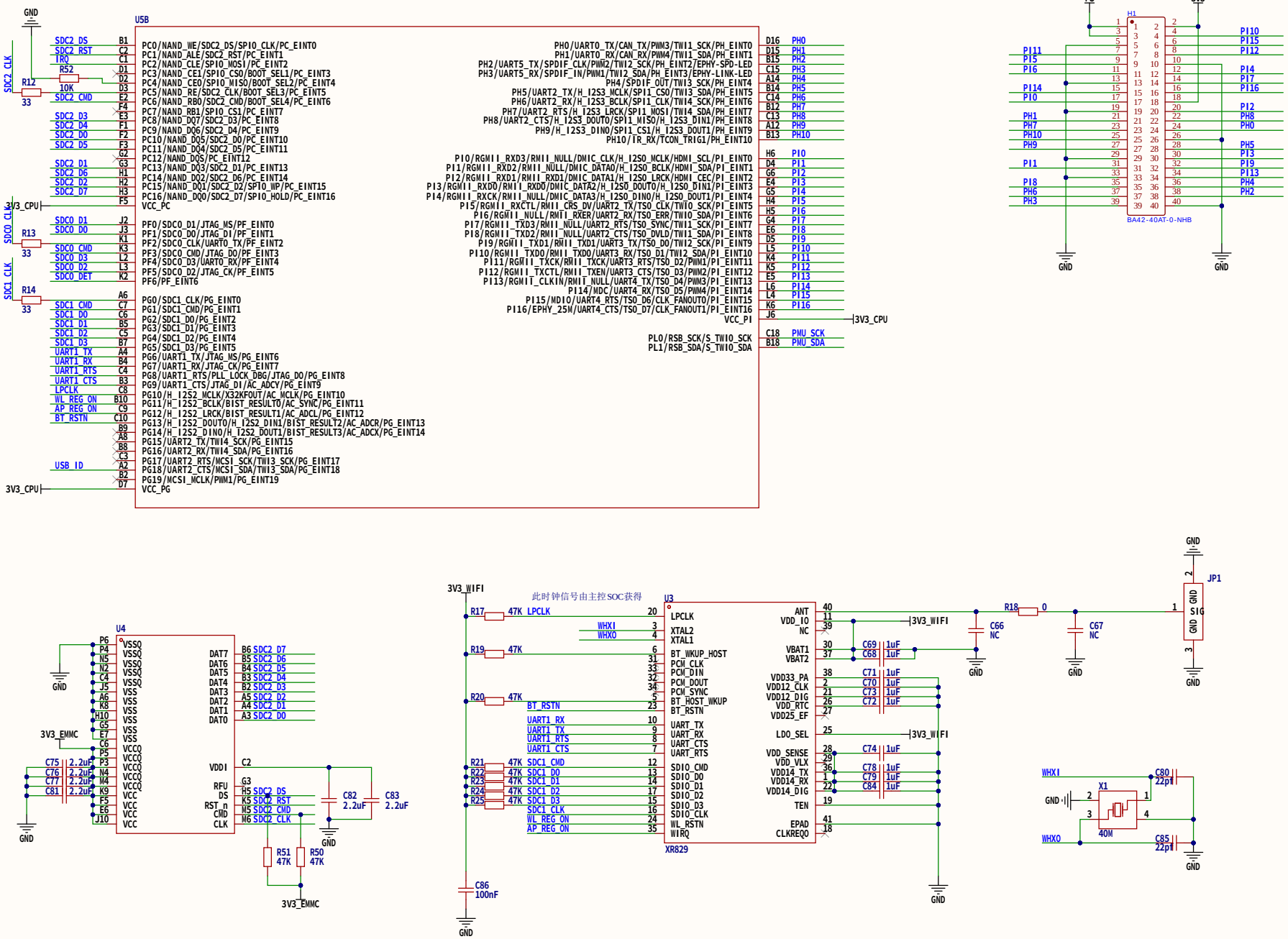

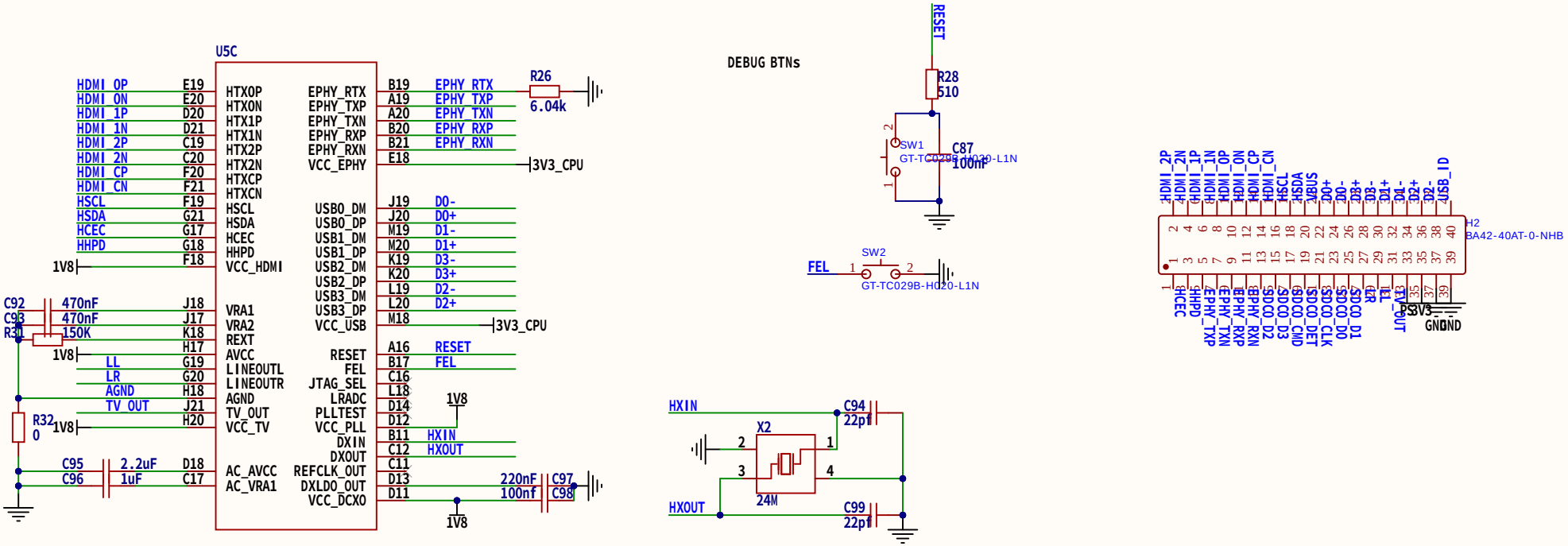
U5C
HDMI_0P E19
HDMI_0N E20
HDMI_1P D20
HDMI_1N D21
HDMI_2P C19
HDMI_2N C20
HDMI_CP F20
HDMI_CN F21
HSCL F19
HSDA G21
HCEC G17
HHPD G18
1V8 F18
C92 470nF J18
C93 470nF J17
R31 150K K18
1V8 H17
LL G19
LR G20
AGND H18
TV_OUT J21
R32 0 1V8 H20
C95 2.2uF D18
C96 1uF C17
HTX0P
HTX0N
HTX1P
HTX1N
HTX2P
HTX2N
HTXCP
HTXCN
HSCL
HSDA
HCEC
HHPD
VCC_HDMI
VRA1
VRA2
REXT
AVCC
LINEOUTL
LINEOUTR
AGND
TV_OUT
VCC_TV
AC_AVCC
AC_VRA1
EPHY_RTX
EPHY_TXP
EPHY_TXN
EPHY_RXP
EPHY_RXN
VCC_EPHY
USB0_DM
USB0_DP
USB1_DM
USB1_DP
USB2_DM
USB2_DP
USB3_DM
USB3_DP
VCC_USB
RESET
FEL
JTAG_SEL
LRADC
PLLTEST
VCC_PLL
DXIN
DXOUT
REFCLK_OUT
DXLDO_OUT
VCC_DCXO
B19 EPHY_RTX
A19 EPHY_TXP
A20 EPHY_TXN
B20 EPHY_RXP
B21 EPHY_RXN
E18 3V3_CPU
J19 D0-
J20 D0+
M19 D1-
M20 D1+
K19 D3-
K20 D3+
L19 D2-
L20 D2+
M18 3V3_CPU
A16 RESET
B17 FEL
C16
L18
D14 1V8
D12
B11 HXIN
C12 HXOUT
C11
D13 220nF C97
D11 100nf C98
1V8
R26 6.04k
DEBUG BTNs
RESET
R28 510
SW1
GT-TC029B-H020-L1N
C87 100nF
FEL
SW2
GT-TC029B-H020-L1N
HXIN
C94 22pf
X2
24M
HXOUT
C99 22pf
HDMI_2P
HDMI_2N
HDMI_1P
HDMI_1N
HDMI_0P
HDMI_0N
HDMI_CP
HDMI_CN
HSCL
HSDA
VBUS
D0+
D0-
D3+
D3-
D1+
D1-
D2+
D2-
USB_ID
H2
BA42-40AT-0-NHB
HCEC
HHPD
EPHY_TXP
EPHY_TXN
EPHY_RXP
EPHY_RXN
SDCO_D2
SDCO_D3
SDCO_CMD
SDCO_CLK
SDCO_DET
SDCO_D0
SDCO_D1
LR
LL
TV_OUT
3V3
GND
GND